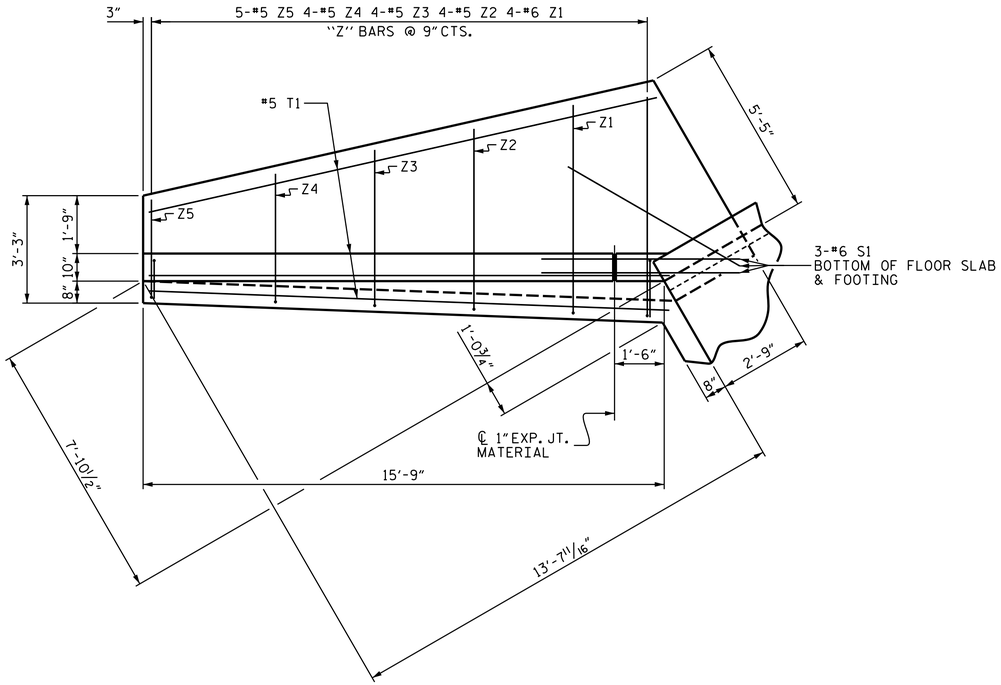

PLAN

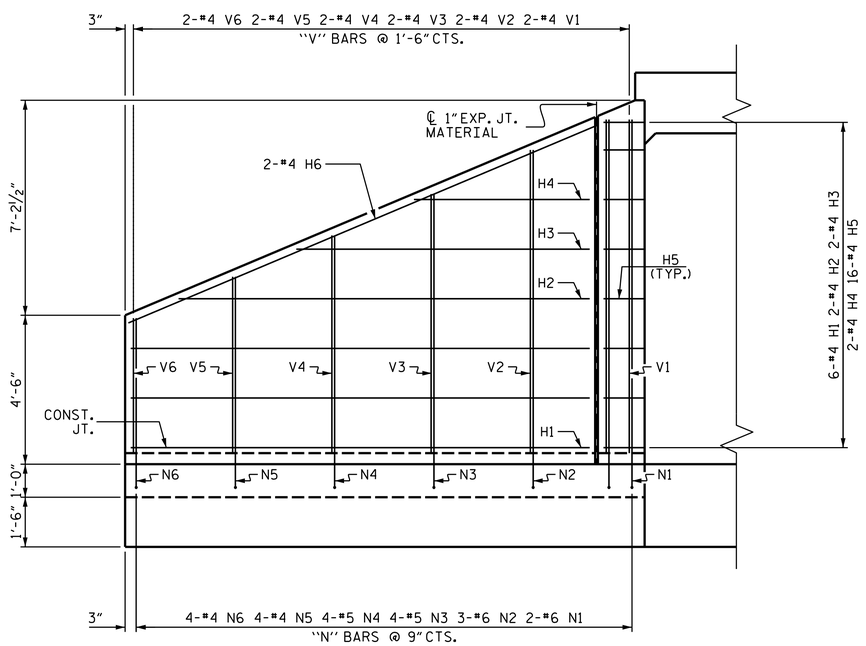

ELEVATION

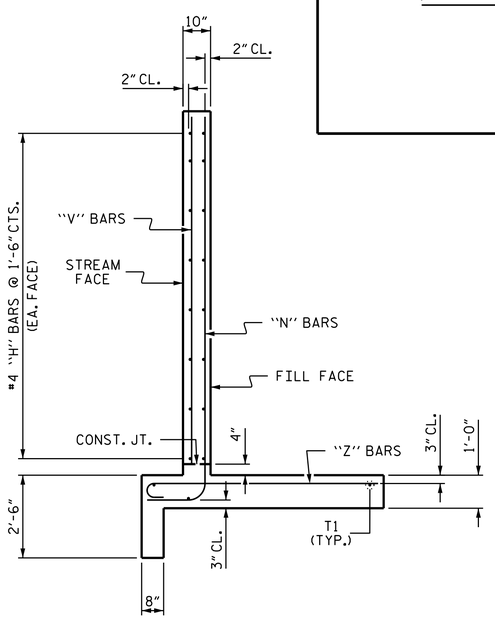

TYPICAL WING SECTION

BAR TYPES

ALL BAR DIMENSIONS ARE OUT TO OUT.

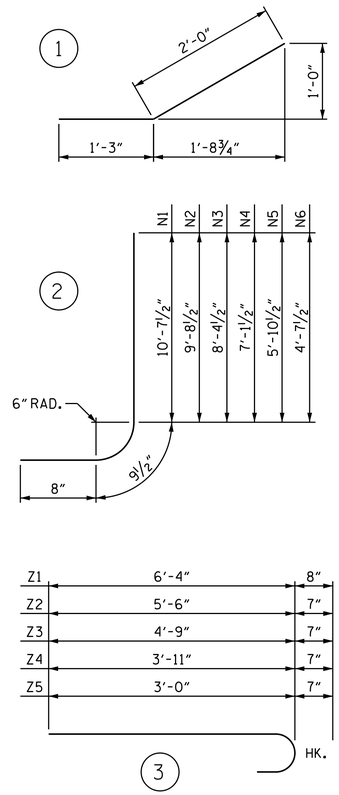

BILL OF MATERIAL

BAR	NO.	SIZE	TYPE	LENGTH	WEIGHT
H1	24	#4	STR	13'-10"	222
H2	8	#4	STR	12'-5"	66
H3	8	#4	STR	8'-10"	47
H4	8	#4	STR	5'-4"	29
H5	64	#4	1	3'-3"	139
H6	8	#4	STR	15'-5"	82
N1	8	#6	2	12'-1"	146
N2	12	#6	2	11'-2"	201
N3	16	#5	2	9'-10"	164
N4	16	#5	2	8'-7"	143
N5	16	#4	2	7'-4"	78
N6	16	#4	2	6'-1"	65
S1	12	#6	STR	6'-0"	108
T1	12	#5	STR	15'-9"	197
V1	8	#4	STR	10'-1"	54
V2	8	#4	STR	9'-2"	49
V3	8	#4	STR	7'-10"	42
V4	8	#4	STR	6'-7"	35
V5	8	#4	STR	5'-4"	29
V6	8	#4	STR	4'-1"	22
Z1	16	#6	3	7'-0"	168
Z2	16	#5	3	6'-1"	102
Z3	16	#5	3	5'-4"	89
Z4	16	#5	3	4'-6"	75
Z5	20	#5	3	3'-7"	75

REINFORCING STEEL
FOR 4 WINGS 2427 LBS

CLASS A CONCRETE
4 WINGS 31.2 CY
2 HEADWALLS 3.1 CY
END CURTAIN WALLS 3.6 CY
SILLS 2.2 CY
TOTAL 40.1 CY

PROJECT NO. 17BP.8.R.127
MOORE COUNTY
STATION: 15+92.50 -L-

SHEET 5 OF 6

STATE OF NORTH CAROLINA
DEPARTMENT OF TRANSPORTATION
RALEIGH

STANDARD WINGS FOR CONCRETE BOX CULVERT

H = 10'-0" SLOPE = 2:1
90° SKEW

NORTH CAROLINA PROFESSIONAL SEAL 14114 ENGINEER ROBERT C. LARSON

DocuSigned by: DB3C8E45B06D499... 3/20/2018

DESIGN ENGINEER OF RECORD: DATE : 3/20/2018
ASSEMBLED BY : K. SU DATE : 12/08/17
CHECKED BY : R. C. LARSON DATE : 12/13/17
DRAWN BY : CCJ 10/99
CHECKED BY : RWW 03/00

DOCUMENT NOT CONSIDERED FINAL
UNLESS ALL SIGNATURES COMPLETED

KCI Associates of North Carolina, P.A.
RALEIGH OFFICE
ENGINEERING BUSINESS LICENSE NUMBER: C-0194
LICENSE NUMBER: C-0194
4505 FALLS OF NEUSE ROAD
SUITE 300
RALEIGH, N.C. 27609-5310
(919) 783-1234

DWG. REF. NO. 5 OF 6

REVISIONS							
NO.	BY:	DATE:	NO.	BY:	DATE:		
1			3				
2			4				

SHEET NO. C-5
TOTAL SHEETS 6

STD. NO. CW9010