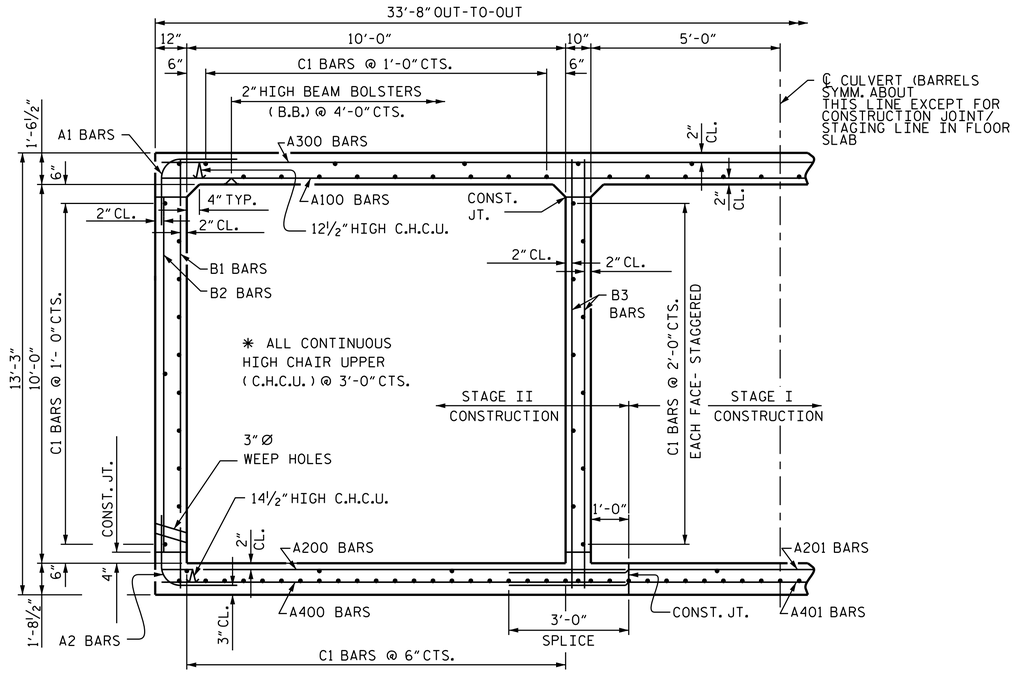

RIGHT ANGLE SECTION OF BARREL

LOOKING DOWNSTREAM

THERE ARE 155 "C" BARS IN SECTION OF BARREL

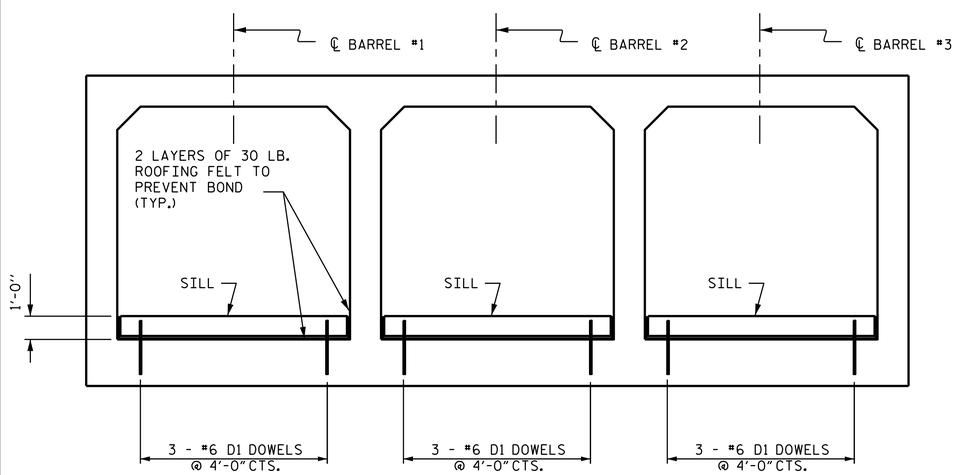

ELEVATION

LOOKING DOWNSTREAM

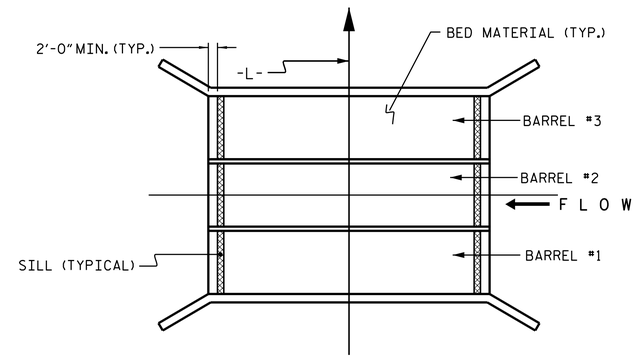

PLAN OF SILLS

2 SILLS REQUIRED IN EACH BARREL

NOTE:
BED MATERIAL PLACED BETWEEN SILLS IN THE CULVERT SHALL PROVIDE A CONTINUOUS LOW FLOW CHANNEL BETWEEN THE LOWER SILLS. THE MATERIAL SHALL BE NATURAL STONE WITH A GRADATION SIZE SIMILAR TO THAT OF CLASS B RIP RAP. STONES LARGER THAN 8 INCHES SHALL NOT BE PLACED WITHIN THE LOW FLOW CHANNEL. BED MATERIAL IS SUBJECT TO APPROVAL BY THE ENGINEER.

NATIVE MATERIALS CONSISTS OF MATERIAL THAT IS EXCAVATED FROM THE STREAM BED OR FLOODPLAIN AT THE PROJECT SITE DURING CULVERT CONSTRUCTION. ONLY MATERIAL THAT IS EXCAVATED FROM THE STREAM BED MAY BE USED TO LINE THE LOW FLOW CULVERT BARREL. RIP RAP MAY BE USED TO SUPPLEMENT THE NATIVE MATERIAL IN THE HIGH FLOW BARREL. IF RIP RAP IS USED TO LINE THE HIGH FLOW CULVERT BARREL, NATIVE MATERIAL SHOULD BE PLACED ON TOP TO FILL VOIDS AND PROVIDE A FLAT SURFACE FOR ANIMAL PASSAGE. NATIVE MATERIAL IS SUBJECT TO APPROVAL BY THE ENGINEER AND MAY BE SUBJECT TO PERMIT CONDITIONS. THE ENTIRE COST OF WORK TO REPLACE EXCAVATED OR SUPPLEMENTAL MATERIAL SHALL BE INCLUDED IN THE LUMP SUM PRICE BID FOR CULVERT EXCAVATION.

BED MATERIAL; SAND, SMALL TO MEDIUM ROCKS, SMALL BOULDERS

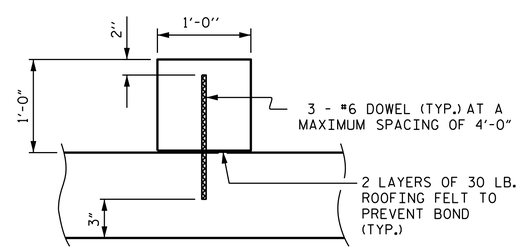

SECTION THROUGH SILL

✱ DOWELS MAY BE PUSHED INTO GREEN CONCRETE AFTER SLAB HAS BEEN FLOAT FINISHED.

REINFORCING STEEL SCHEDULE

BAR	NO.	SIZE	TYPE	LENGTH	WEIGHT
A1	484	5	1	6'-10"	3450
A2	484	7	1	6'-10"	6760
A100	242	5	STR.	33'-4	8414
A200	242	5	STR.	12'-7"	3176
A201	242	5	STR.	23'-8"	5974
A300	242	5	STR.	33'-4"	8414
A400	242	7	STR.	12'-7"	6224
A401	242	7	STR.	23'-8"	11707
B1	364	4	STR.	12'-10"	3120
B2	364	4	STR.	9'-2"	2229
B3	724	4	STR.	12'-10"	6207
✱C1	775	4	STR.	26'-1"	13503
D1	18	6	STR.	2'-3"	61
G1	8	5	STR.	33'-4"	278
REINFORCING STEEL (BARREL) LB.					79517

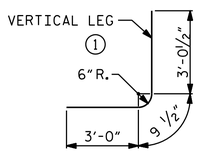

BAR TYPE

BAR DIMENSIONS ARE OUT TO OUT

✱ FIVE BAR RUNS

REINFORCING SPLICE LENGTH CHART

BAR	SPLICE
#4 C1	2'-5"
#4 "B"	1'-5"

I HEREBY CERTIFY THESE PLANS ARE THE AS-BUILT PLANS

PROJECT NO. 17BP.8.R.127

MOORE COUNTY

STATION: 15+92.50 -L-

SHEET 4 OF 6

DESIGN ENGINEER OF RECORD: DocuSigned by: DATE : 3/20/2018

DRAWN BY : K. SU DATE : 12/08/17

CHECKED BY : R. C. LARSON DATE : 12/13/17

DocuSigned by: DB3C8E45B06D499...

NORTH CAROLINA PROFESSIONAL SEAL 14114 ENGINEER ROBERT C. LARSON

3/20/2018

DOCUMENT NOT CONSIDERED FINAL UNLESS ALL SIGNATURES COMPLETED

KCI Associates of North Carolina, P.A.
RALEIGH OFFICE
CONTACT: P.O. BOX 1475 RALEIGH, NC 27602
LICENSE NUMBER: C-0964
4505 FALLS OF NEUSE ROAD SUITE 400
RALEIGH, N.C. 27609-5210
PHONE 919-872-9204

DWG. REF. NO. 4 OF 6

STATE OF NORTH CAROLINA
DEPARTMENT OF TRANSPORTATION
RALEIGH

BARREL SECTION
TRIPLE 10 FT. X 10 FT. CONCRETE BOX CULVERT 90° SKEW

REVISIONS						
NO.	BY:	DATE:	NO.	BY:	DATE:	
1			3			
2			4			

SHEET NO. C-4

TOTAL SHEETS 6