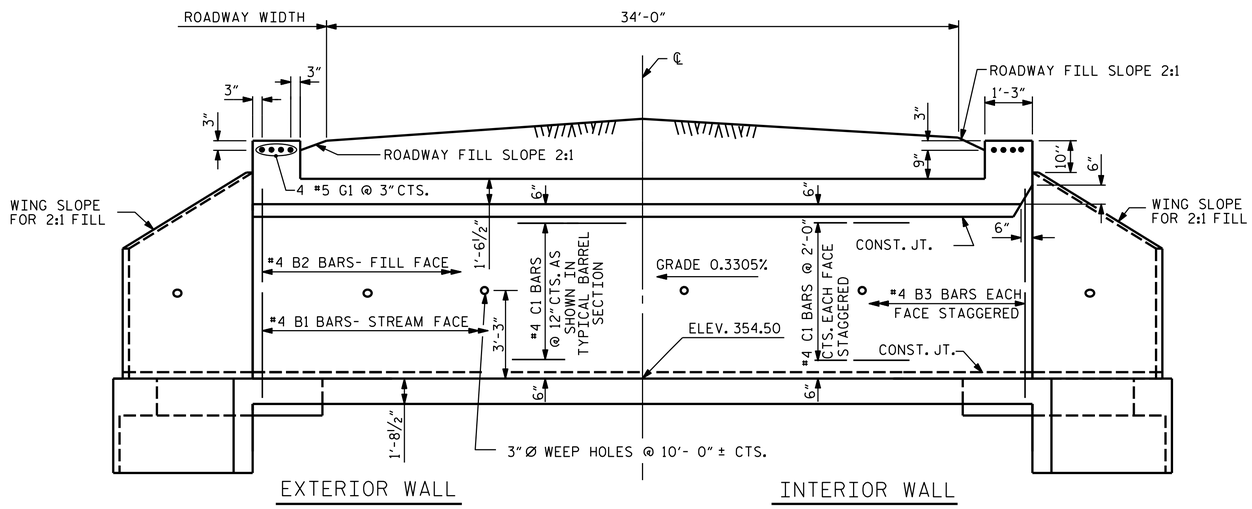

CULVERT SECTION NORMAL TO ROADWAY

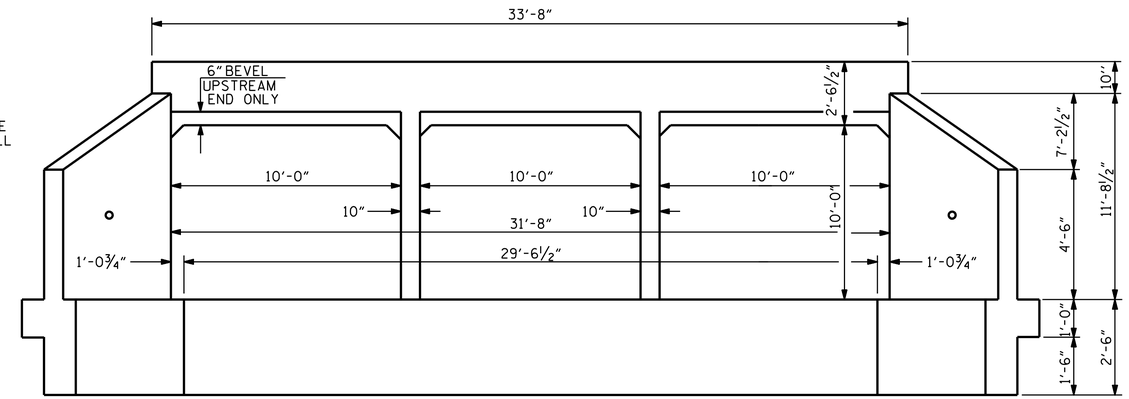

END ELEVATION

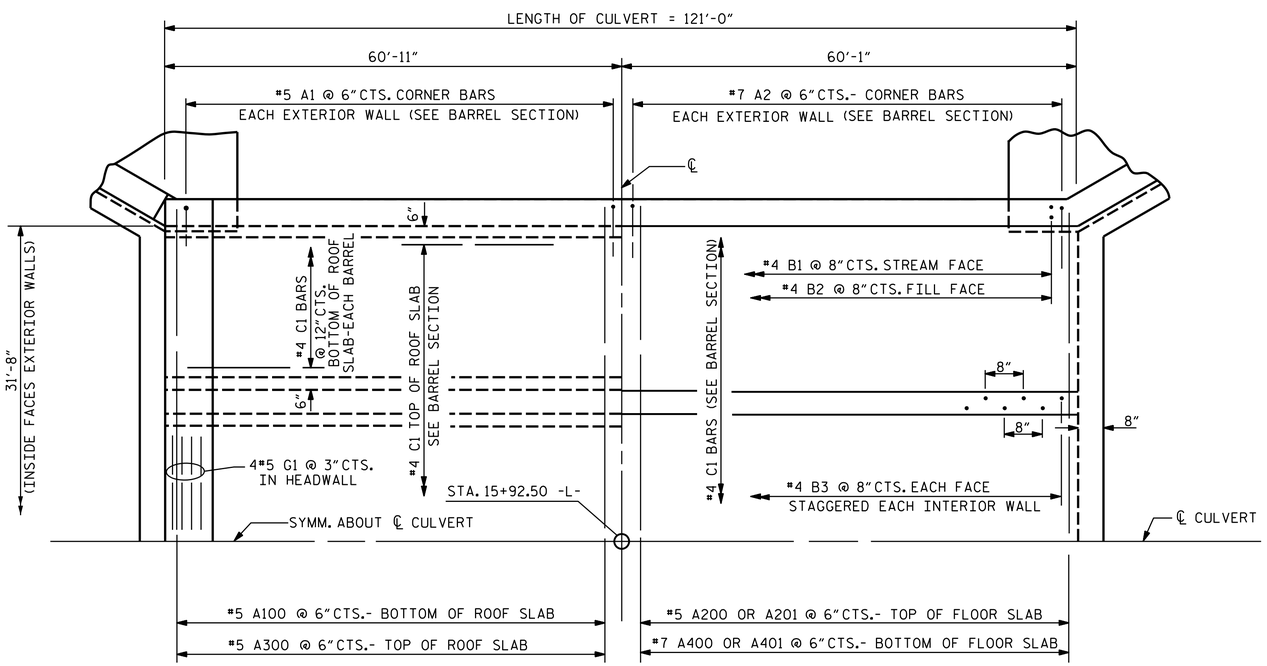

PART PLAN - ROOF SLAB

PART PLAN - FLOOR SLAB

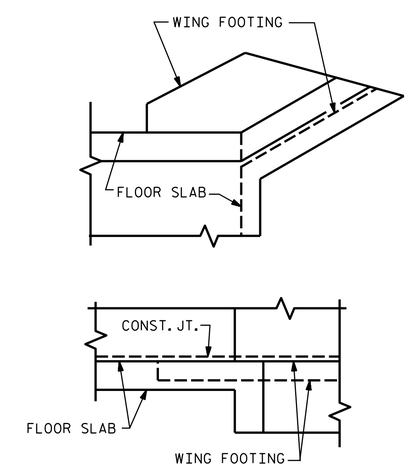

DETAIL

CONNECTION OF WING FOOTING AND FLOOR SLAB WHEN SLAB IS THICKER THAN FOOTING

I HEREBY CERTIFY THESE PLANS ARE THE AS-BUILT PLANS

PROJECT NO. 17BP.8.R.127

MOORE COUNTY

STATION: 15+92.50 -L-

SHEET 3 OF 6

STATE OF NORTH CAROLINA
DEPARTMENT OF TRANSPORTATION
RALEIGH

BARREL STANDARD TRIPLE 10 FT. X 10 FT. CONCRETE BOX CULVERT 90° SKEW

NORTH CAROLINA PROFESSIONAL SEAL 14114 ENGINEER ROBERT C. LARSON

DocuSigned by: DB3C8E45B06D499...

3/20/2018

DESIGN ENGINEER OF RECORD: DATE: 3/20/2018

ASSEMBLED BY: K. SU DATE: 12/06/17
CHECKED BY: R. C. LARSON DATE: 12/13/17

DRAWN BY: JOEL JOHNSON DATE: MAR. 1971
CHECKED BY: GARY BROOME DATE: MAR. 1971

SPECIAL

STANDARD

DOCUMENT NOT CONSIDERED FINAL UNLESS ALL SIGNATURES COMPLETED

KCI Associates of North Carolina, P.A.
RALEIGH OFFICE
1505 FALLS OF NEUSE ROAD SUITE 400 RALEIGH, N.C. 27609-5210 (919) 782-1204
LICENSE NUMBER C-0984

DWG. REF. NO. 3 OF 6

REVISIONS								
NO.	BY:	DATE:	NO.	BY:	DATE:			
1			3					
2			4					

SHEET NO. C-3

TOTAL SHEETS 6

STD. NO. CB13

REVISED 8-28-92 BY E.L.R. CHECKED BY G.R.P. REDRAWN NOV. 1990 BY TSS. CHECKED BY ARB

REVISED 11-19-99 BY M.M. CHECKED BY R.W.W.